Unit : [inch] mm

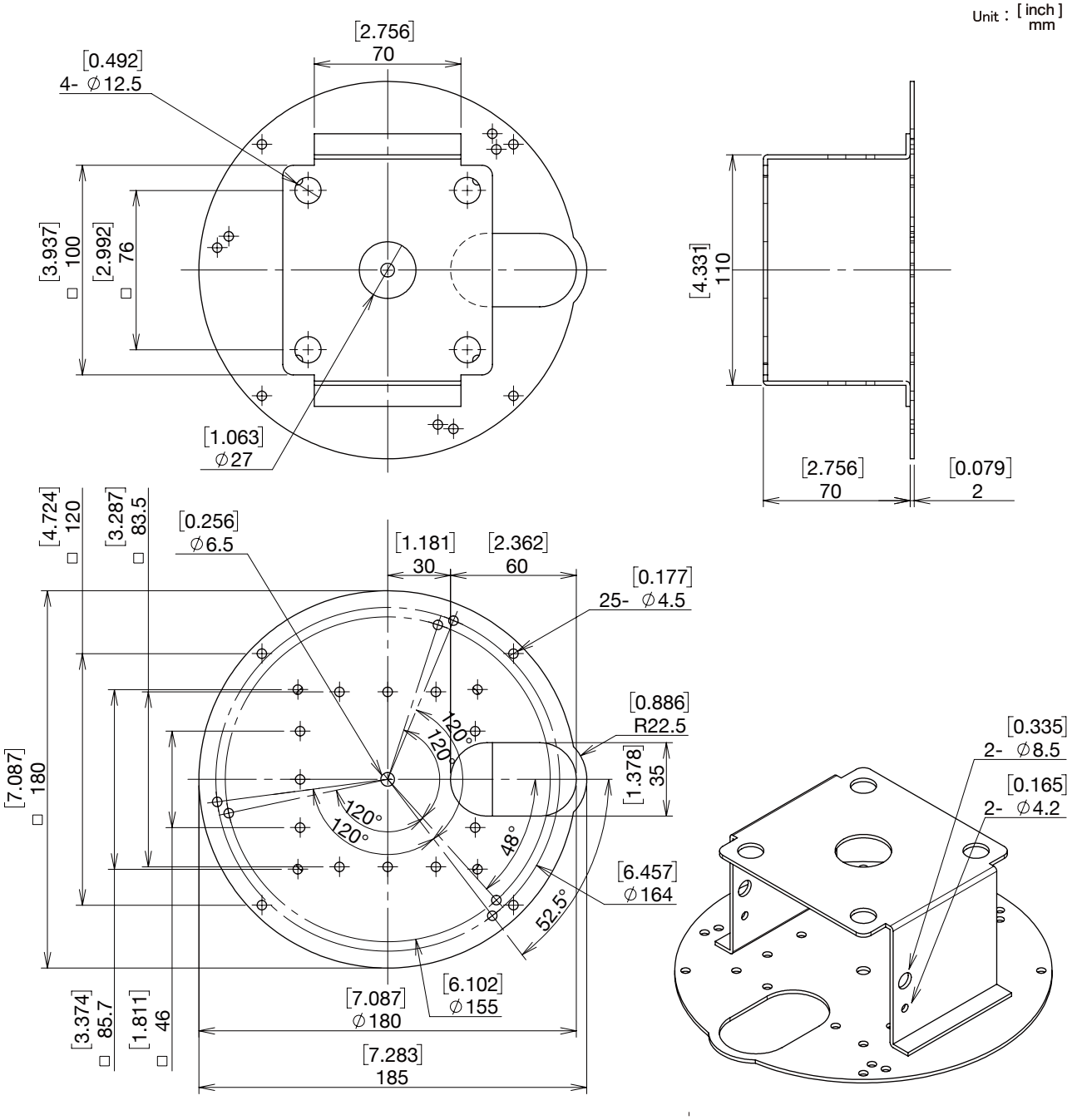

Universal Ceiling Mount Bracket

A-SWD5CA2(W)

Specifications

Material	Steel
Color	White, Powder Coat Finish
Approx. Weight	0.7kg(1.5 lbs)
Compatibility	Ceiling Bracket Model A-CM100NPT for 1 1/2"NPT Pipe 3/4" NPT Pipe
Standard & Compliance	RoHS
Standard Accessories	M4 x 20mm Screw x 4 pcs, M4 Hex Nut x 4 pcs, M4 Washer x 8 pcs, M8 x 25mm Screw x 4 pcs, M8 Hex Nut x 4 pcs, M8 Washer x 8 pcs, M3 x 15mm Screw x 1 pc, M3 Hex Nut x 1 pc, M3 Washer x 2 pcs, 1/4-20 x 3/8 Screw x 1 pc, 3/4” Watertight Plastic Bushing x 1

For:

ASC Housing	A-SWD5, A-SWD5V, A-SWD5VX, A-SWD5Z
Canon Camera	VB-H651VE, M641VE, M640VE, H651V, M641V, M640V, R13, R11, CR-N300, CR-N500
Panasonic Camera	WV-X2571LNJ, WV-X2533LNJ/2232LJ
Sony Camera	SNC-WR630
Other Cameras	Any 1/4-20 Mount Cameras

ASC
ASC Corporation